HSF

NOTES:
Current Rating: 3.0AMP
Contact Resistance: 20mΩ Max
Withstand Voltage: 1000V AC/DC
Insulation Resistance: 1000MΩ Min
Operation Temperature: −40℃ to +105℃

Contact Material: Brass
Contact plating: Au Or Sn over Ni
Insulator Material: PA9T+30%G.F UL94V−0(Std)
Or PBT+30%G.F UL94V−0

Recommended P.C.B Layout(Top Side)
(PCB BOARD TOLERANCE±0.05)

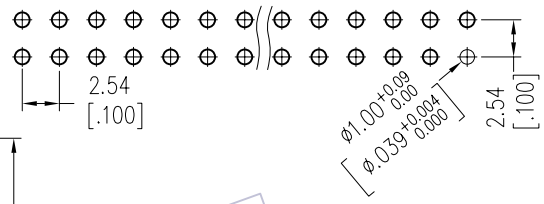

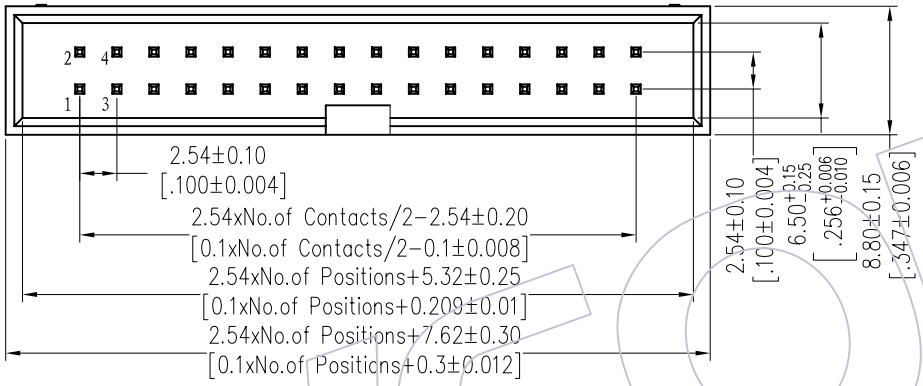

Ordering Information

3110-XX P XX B K00 X 1

No.of Pins	Contact Plating	Color Insulator	Packing:
6P 24P	G0=Gold Flash	B=Black	A=Tray
8P 26P	G3=10u"Gold	U=Blue	T=Tube
10P 30P	G4=15u"Gold	G=Gray(427C)	
12P 34P	G5=30u"Gold	E=Gray(413C)	
14P 40P	S0=Gold Flash/Tin		
16P 50P	S3=10u"Gold/Tin		
18P 60P	S4=15u"Gold/Tin		
20P 64P	S5=30u"Gold/Tin		
	SN=Tin		

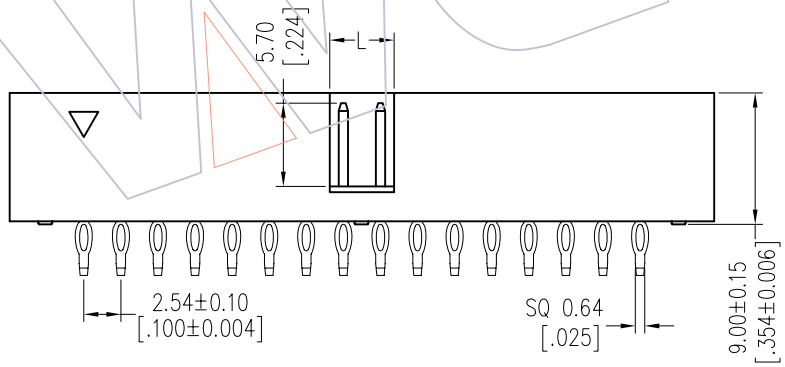

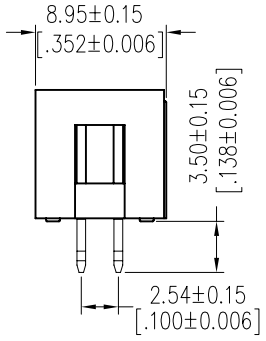

Item	Pitch	Mating
Standard	2.54	5212/2185
Alternate		

Dimension antitheses list	
NO. Pin	L
6P-8P	4.00
10P-64P	4.40

REV	DATE	MODIFICATION DESCRIPTION	CHANGE
A0	2012/09/25	NEW	------

OPERATION	
X.X	±0.40
X.XX	±0.25
X.XXX	±0.15
Angle	± 3°
DIM	TOL

DRAW	JYHuang	DATE	2012/09/25
CHECK		DATE	
APPROVE		DATE	

SCALE	FIT
UNIT	mm
SIZE	A4
SHEET	1/1
PROJ.	

PART NO. 3110-XXPXXBK00XX

TITLE: 2.54 BOX HEADER 180° H=9.0(PRESS FIT)

Customer NO.

WCON
Http: www.wcon.com

WCON-Dongguan
Tel: +86 769 85358920
Fax: +86 769 85358915
E-mail: sales@wcon.com

WCON-Kunshan
Tel: +86 512 57468408
Fax: +86 512 57468468
E-mail: salesks@wcon.com